Item No.: _____
Project No.: _____
S.I.S. No.: _____

Profit from the Eagle Advantage®

Specification Sheet

Worktables with Rear Upturn and Galvanized Tubular Base —Spec-Master® Series

Short Form Specifications

Eagle worktables, Spec-Master® series, model _____. Top constructed of 14 gauge 300 series stainless steel with 1½″ roll on front, 1½″ rear upturn, and sides turned down 90˚. Open front with 1¼″ O.D. galvanized tubular crossbracing on sides and rear. Top reinforced with welded hat channels and sound deadened. Constructed with uni-lok® patented gusset system with the gussets recessed into the hat channels to reduce lateral movement. Legs are 1⅝″ O.D. galvanized tubing with galvanized gussets and 1″ hi-impact plastic bullet feet.

worktable with upturn and tubular base

Patented uni-lok® System
(Patent No. 5,165,349)

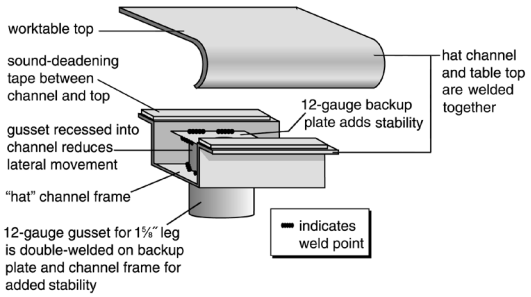

MODELS:

❑ *UT2424GTE*	❑ *UT24108GTE*	❑ *UT3072GTE*	❑ *UT3660GTE*
❑ *UT2430GTE*	❑ *UT24120GTE*	❑ *UT3084GTE*	❑ *UT3672GTE*
❑ *UT2436GTE*	❑ *UT24132GTE*	❑ *UT3096GTE*	❑ *UT3684GTE*
❑ *UT2448GTE*	❑ *UT24144GTE*	❑ *UT30108GTE*	❑ *UT3696GTE*
❑ *UT2460GTE*	❑ *UT3030GTE*	❑ *UT30120GTE*	❑ *UT36108GTE*
❑ *UT2472GTE*	❑ *UT3036GTE*	❑ *UT30132GTE*	❑ *UT36120GTE*
❑ *UT2484GTE*	❑ *UT3048GTE*	❑ *UT30144GTE*	❑ *UT36132GTE*
❑ *UT2496GTE*	❑ *UT3060GTE*	❑ *UT3648GTE*	❑ *UT36144GTE*

Tabletop

- Top reinforced with welded-on hat channel.
- Sound-deadened between top and channels.
- 1½″ (38mm) 90˚ rear upturn with radius at intersection.
- 1½″ (38mm)-diameter 180˚ rolled edge on front. Ends are turned down 90˚, providing for flush installations when required.
- 14 gauge 300 series polished stainless steel.

Crossbracing—1¼″ (38mm)-diameter

- Heavy gauge, galvanized.
- Aluminum castings join rear and side crossbraces with legs.

Legs—1⅝″ (41mm)-diameter

- Units 96″ to 120″ (2438 to 3048mm) long come with six legs; Units 132″ and 144″ (3353 and 3658mm) come with eight legs.
- Patented uni-lok® gusset system (patent #5,165,349) is recessed into channel, reducing lateral movement.
- Heavy gauge galvanized steel.
- Galvanized gussets.
- 1″ (25mm) adjustable hi-impact plastic feet.

Options / Accessories

- ❑ Drawer
- ❑ Lock
- ❑ Casters
- ❑ Stainless steel bullet feet
- ❑ Stainless steel gussets
- ❑ Overshelves
- ❑ Duplex receptacles
- ❑ Pot rack
- ❑ Sink
- ❑ Additional undershelf
- ❑ Stabilizer Bar (for 30″- and 36″-wide tables)

EAGLE GROUP
100 Industrial Boulevard, Clayton, DE 19938-8903 USA
Phone: 302-653-3000 • 800-441-8440 • Fax: 302-653-2065
www.eaglegrp.com
www.eaglemhc.com

Certifications / Approvals

NSF

AutoQuotes

KCL

For custom configuration or fabrication needs, contact our **SpecFAB® Division.**
Phone: 302-653-3000 • Fax: 302-653-2065 • e-mail: quotes@eaglegrp.com

Spec sheets available for viewing, printing or downloading from our online literature library at our websites

Eagle Foodservice Equipment, Eagle MHC, and SpecFAB® are divisions of Eagle Group. ©2024 by the Eagle Group

EAGLE GROUP®
Profit from the Eagle Advantage®

Item No.: _____
Project No.: _____
S.I.S. No.: _____

Worktables with Rear Upturn and Galvanized Tubular Base —Spec-Master® Series

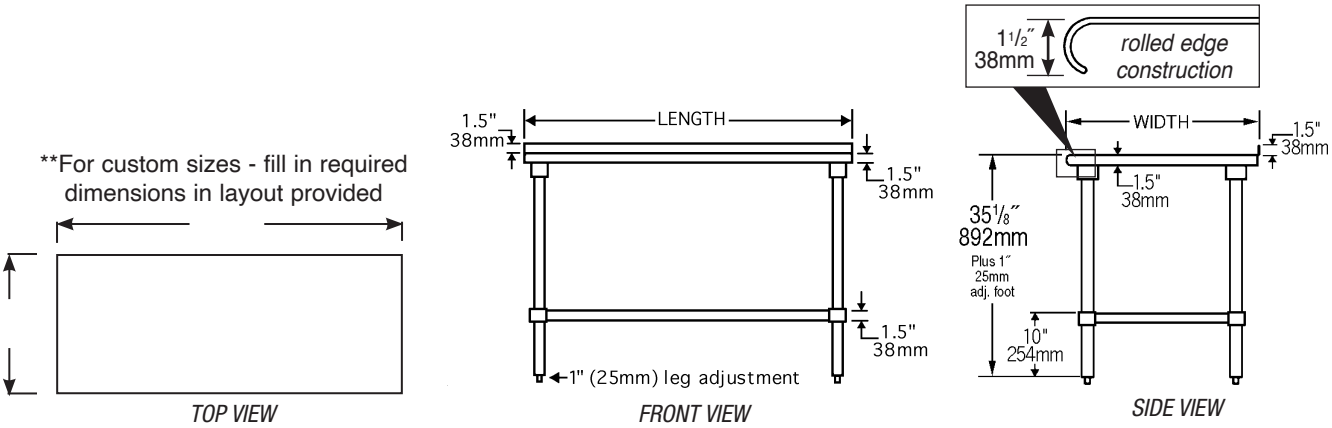

model #	# of legs	width in.	width mm	length in.	length mm	weight lbs.	weight kg
UT2424GTE	4	24″	610	24″	610	50	22.7
UT2430GTE	4	24″	610	30″	762	52	23.6
UT2436GTE	4	24″	610	36″	914	55	24.9
UT2448GTE	4	24″	610	48″	1219	67	30.4
UT2460GTE	4	24″	610	60″	1524	71	32.2
UT2472GTE	4	24″	610	72″	1829	90	40.8
UT2484GTE	4	24″	610	84″	2134	98	44.5
UT2496GTE	6	24″	610	96″	2438	114	51.7
UT24108GTE	6	24″	610	108″	2743	142	64.4
UT24120GTE	6	24″	610	120″	3048	148	67.1
UT24132GTE	8	24″	610	132″	3353	177	80.3
UT24144GTE	8	24″	610	144″	3658	193	87.6
UT3030GTE	4	30″	762	30″	762	54	24.5
UT3036GTE	4	30″	762	36″	914	64	29.0
UT3048GTE	4	30″	762	48″	1219	74	33.6
UT3060GTE	4	30″	762	60″	1524	87	39.5
UT3072GTE	4	30″	762	72″	1829	105	47.6
UT3084GTE	4	30″	762	84″	2134	122	55.3
UT3096GTE	6	30″	762	96″	2438	126	57.2
UT30108GTE	6	30″	762	108″	2743	199	90.3
UT30120GTE	6	30″	762	120″	3048	205	93.0
UT30132GTE	8	30″	762	132″	3353	210	95.3
UT30144GTE	8	30″	762	144″	3658	218	98.9
UT3648GTE	4	36″	914	48″	1219	83	37.7
UT3660GTE	4	36″	914	60″	1524	108	49.0
UT3672GTE	4	36″	914	72″	1829	114	51.7
UT3684GTE	4	36″	914	84″	2134	132	59.9
UT3696GTE	6	36″	914	96″	2438	149	67.6
UT36108GTE	6	36″	914	108″	2743	203	92.1
UT36120GTE	6	36″	914	120″	3048	207	93.9
UT36132GTE	8	36″	914	132″	3353	228	103.4
UT36144GTE	8	36″	914	144″	3658	241	109.3

EAGLE GROUP
100 Industrial Boulevard, Clayton, DE 19938-8903 USA
Phone: 302-653-3000 or 800-441-8440 • Fax: 302-653-2065
www.eaglegrp.com • www.eaglemhc.com

Printed in U.S.A.
©2024 by Eagle Group
Rev. 08/24

Spec sheets available for viewing, printing or downloading from our online literature library at our websites

Although every attempt has been made to ensure the accuracy of the information provided, we cannot be held responsible for typographical or printing errors. Information and specifications are subject to change without notice. Please confirm at time of order.